ASSEMBLY INSTRUCTIONS

RAX-MS-X20-X2

Replacement of RBA 10“, RKA, and RXA plastic hinges (cabinet RBA 10” used for illustration purposes).

1

Previous - plastic hinge.

New version - metal hinge.

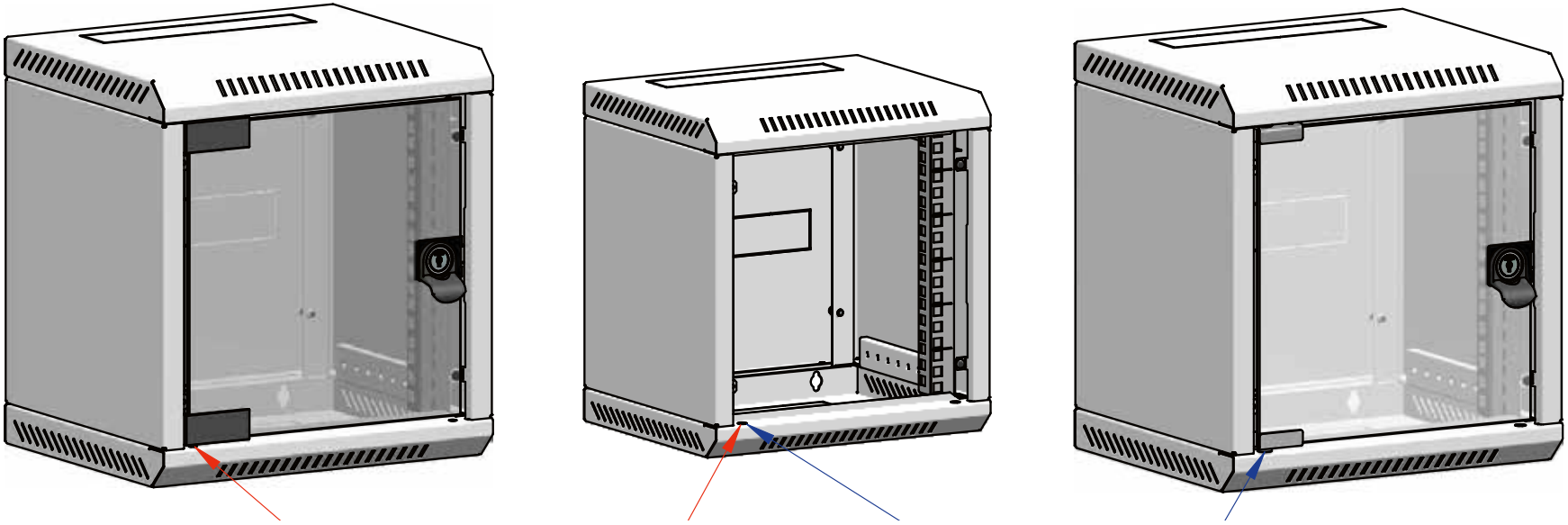

Previous hole: Ø 6.4 mm.

New hole: Ø 9 mm.



RAX-MS-X20-X2
Tritón metal hinges (pair) for RXA (flat-pack), RKA and 10“ RBA cabinets.



RAX-MS-X20-XX Kit for replacing Tritón plastic hinges on cabinet Flatpack or 10”.
MUST BE ORDERED ADDITIONALLY when replacing the original plastic hinges with the metal version.

Tritón Pardubice, spol. s r. o.
č.p. 130, 530 02 Starý Mateřov,, Česká republika
Tel.: +420 467 401 111
E-mail: sale@triton.cz
www.triton.cz

Triton Chemnitz GmbH
Teichstraße 11, 09366 Niederdorf, Německo
Tel.: +49 (0) 37296 5498-0
E-mail: info@triton-racks.de
www.triton-racks.de

2

Remove the door, take off the plastic hinges and clean the glass from any remaining adhesive and adhesive tape + degrease the glass.

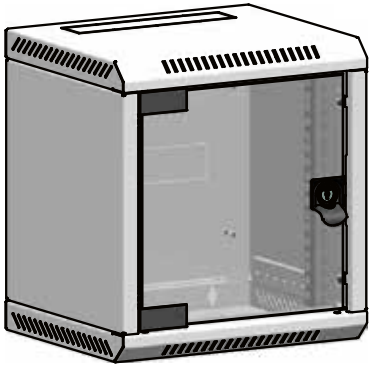

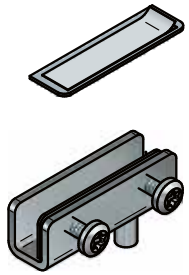

Installation of the metal hinge.

1. Glue the supporting plates to the glass (degreased) - glue them to the edge of the glass on the inner surface - both the top and bottom parts
2. Upper hinge - install on the glass and apply the slide sleeve
3. Plug the hinge into the hole in the frame
4. Install the lower hinge into the frame (including the slide sleeve and rubber pad)
5. Insert the glass into the lower hinge and secure it with M4 screws in the hinge

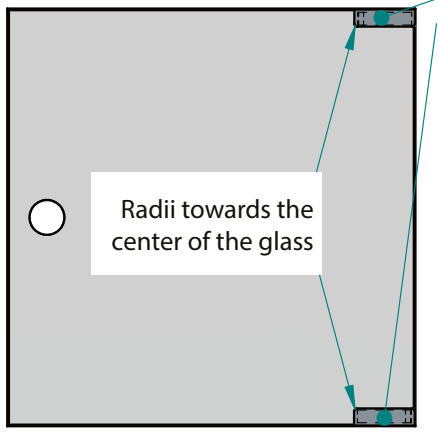

1. Glue the supporting plate to the corner of the glass
If the door is equipped with a lock - glue it to the inner surface of the glass

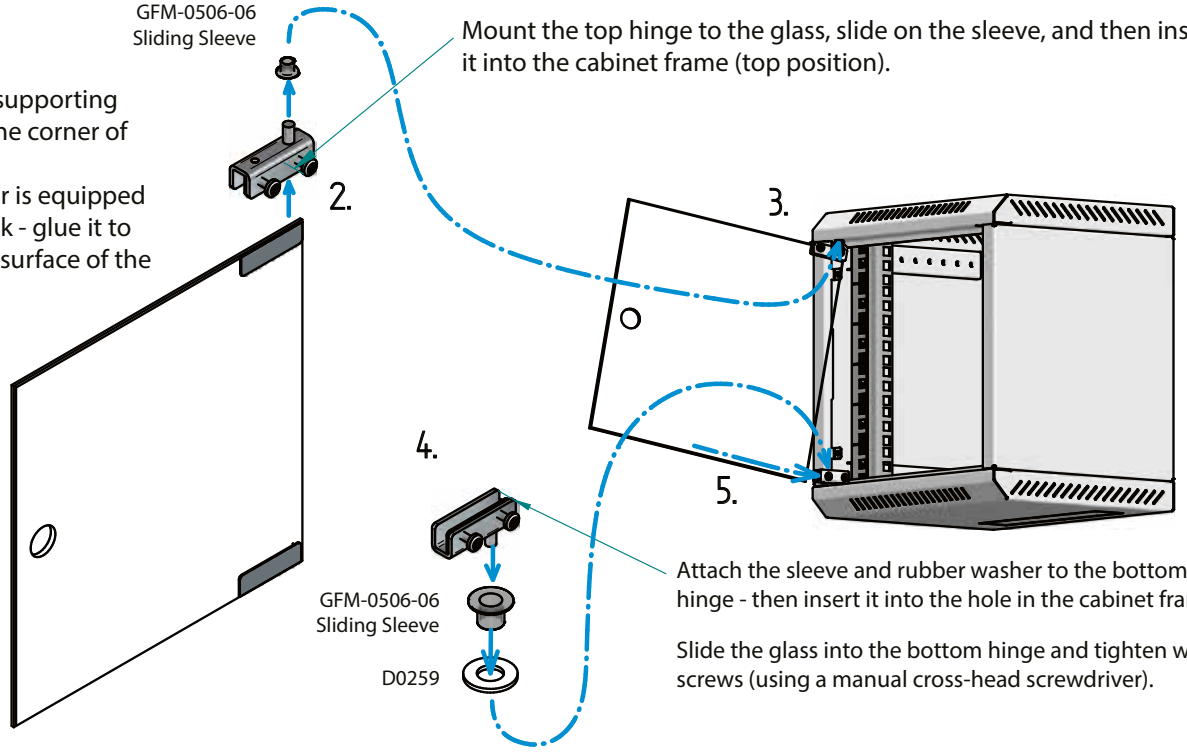

Mount the top hinge to the glass, slide on the sleeve, and then insert it into the cabinet frame (top position).

Attach the sleeve and rubber washer to the bottom hinge - then insert it into the hole in the cabinet frame.

Slide the glass into the bottom hinge and tighten with M4 screws (using a manual cross-head screwdriver).

Tritón Pardubice, spol. s r. o.
č.p. 130, 530 02 Starý Mateřov,, Česká republika
Tel.: +420 467 401 111
E-mail: sale@triton.cz
www.triton.cz

Triton Chemnitz GmbH
Teichstraße 11, 09366 Niederdorf, Německo
Tel.: +49 (0) 37296 5498-0
E-mail: info@triton-racks.de
www.triton-racks.de