NEW

RAX-MS-A53-X2
All-metal handle with Flexo Code electronic lock.

RAX-MS-A54-X2
All-metal handle with Flexo RFID electronic lock.

Triton Electronic Lock

RAX-MS-A53-X2

RAX-MS-A54-X2

A new product in the range of Tritón locking systems. The all-metal handle can now be ordered with an electronic lock. The portfolio includes a version with a numeric keypad under the designation Flexo Code, and a version with an RFID card / fob reader called Flexo RFID.

Flexo Code RAX-MS-A53-X2
This lock impresses with its versatile application options. The innovative design offers the possibility of individual time management with an adjustable closing time (Real-Time Clock / RTC) and up to 999,999 code variations. The high-quality keypad provides tactile feedback. The battery ensures a long service life of up to 30,000 locking cycles (approx. 3.5 years). The batteries are accessed from the outside and can be replaced without removing the locking system. Furthermore, data is retained even when the battery is discharged or during replacement.
The operating temperature ranges from 0 °C to 55 °C and the protection rating is IP30.

Settings:
- Option to use 4-digit or 6-digit codes.
- Access codes can be individually added or removed at any time.
- The memory allows storing up to 50 user codes.

Flexo RFID RAX-MS-A54-X2
The second option is an electronic lock for cards or fobs named Flexo RFID (Radio Frequency Identification). It has been developed for leading RFID standards (MIFARE® Classic 1K and MIFARE® Desfire EV II) operating at a frequency of 13.56 MHz. Thanks to three authorization levels (master, manager, and user), the lock offers high operational flexibility. The battery ensures a long service life of up to 25,000 locking cycles. The batteries are accessed from the outside and can be replaced without removing the locking system. Furthermore, data is retained even when the battery is discharged or during replacement.
The operating temperature ranges from 0 °C to 55 °C and the protection rating is IP30.
Supplied with 2 pcs of MIFARE Classic 1K RFID cards.
Maximum number of master cards: 3
Maximum number of manager cards: 2
Maximum number of user cards: 10



All-metal handle with Flexo Code electronic lock.



All-metal handle with Flexo RFID electronic lock.



Flexo Code with numeric keypad.

Flexo RFID with access card.



Rear view of the handle with the electronic lock.



Side view.

Tritón Pardubice, spol. s r. o.
č.p. 130, 530 02 Starý Mateřov, Czech Republic
Tel.: +420 467 401 111
E-mail: sale@triton.cz

Branch office in Prague
Do Čertous 2627/9, 193 00 Praha 20 - Horní Počernice, Czech Republic
Tel.: +420 242 441 160
E-Mail: praha@triton.cz

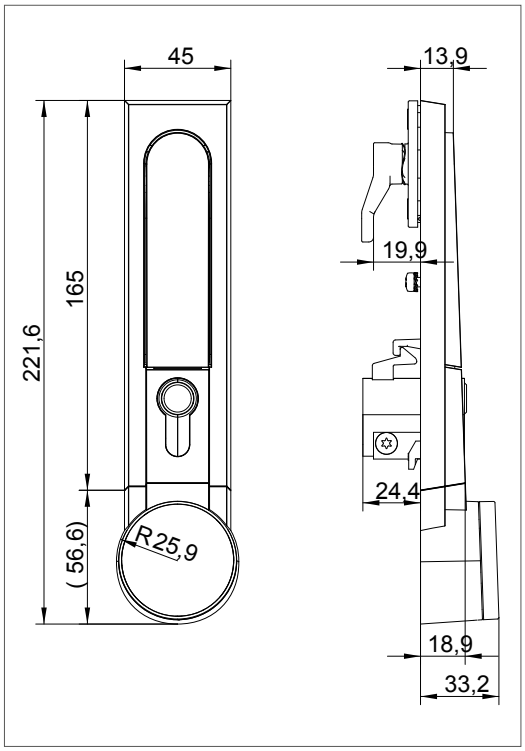

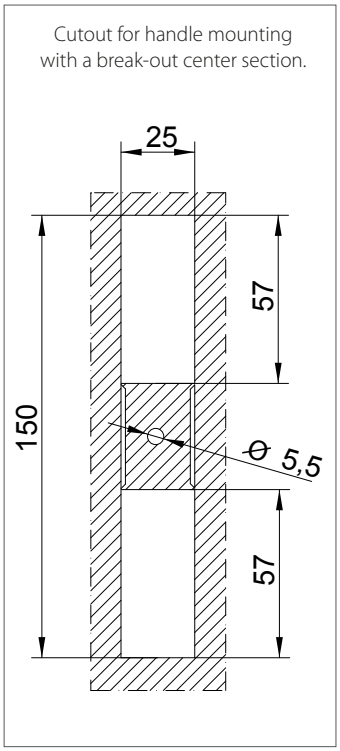

Electronic locks are mounted into the lower section of the Tritón all-metal handle, which guarantees full compatibility with already installed and used Tritón free-standing cabinets.
The assembly can be installed into standard doors with a 150 × 25 mm cutout featuring a break-out center piece for grounding the electronic variant of the locking systems.
The design seamlessly integrates into the handle body. This assembly can be used for single-point locking, as well as for the multi-point locking mechanism of a free-standing cabinet.
The lock can be mounted into left-hand, right-hand, and double doors.

Opening principle:
By entering the code or presenting the card, the electronic module releases the swinghandle. After pressing the button on the lock cylinder, the handle pops up, and turning it opens the cabinet.

The manufacturer approves the use of VARTA batteries according to the specifications below. The use of other batteries may result in a reduction of locking cycles or limitations of certain lock features and functions.

Battery specifications: VARTA
1/2 AA H-R
850 mAh
CR High Power





Tritón Pardubice, spol. s r. o.
č.p. 130, 530 02 Starý Mateřov, Czech Republic
Tel.: +420 467 401 111
E-mail: sale@triton.cz

Branch office in Prague
Do Čertous 2627/9, 193 00 Praha 20 - Horní Počernice, Czech Republic
Tel.: +420 242 441 160
E-Mail: praha@triton.cz

Accessories for Triton electronic locks



RAX-MS-X57-X2

RAX-MS-A57-X2

RFID card MIFARE Classic 1K ZSLK-004 (black/grey).

Operating frequency: 13.56 MHz (HF – High Frequency).
Chip type: MIFARE Classic 1K (NXP S50 compatible).
Memory capacity: 1 kB (1024 bytes), organized into 16 independent sectors.
Communication standard: ISO/IEC 14443 Type A.
Security: CRYPTO1 encryption algorithm and the option to set individual keys for each sector.
Lifespan: approx. 100,000 write and read cycles.

Original Burg cards and chips ensure 100% system functionality.

Note: If the user utilizes 13.56 MHz identification and access control systems, we recommend and provide compatibility verification with the Tritón / Burg system.



RAX-MS-A59-X2

RAX-MS-A59-X2

RFID chip in the form of a MIFARE Classic 1K ZSLM-001 sticker (Ø 25 mm).

Technology (chip): MIFARE Classic 1K (operates according to the ISO/IEC 14443A standard).
Operating frequency: 13.56 MHz (high-frequency HF RFID / NFC).
Memory capacity: 1 kB (1024 bytes), organized into 16 independent sectors.
Shape and dimensions: circular sticker, Ø 25 mm.

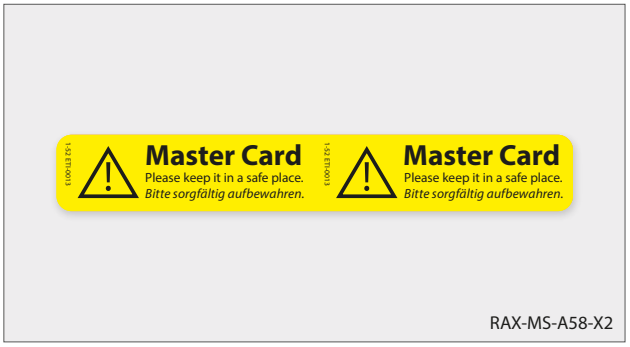

RAX-MS-A58-X2

RAX-MS-A58-X2

Master card identification sticker 1-52 ETI-0013 (RFID).

Designed for visual identification and differentiation of master cards in electronic RFID locking systems.
By applying it to an RFID card, you prevent the master card from being confused with standard user cards.


RAX-MS-X60-X2

RAX-MS-A60-X2

Battery set 2 pcs VARTA 1/2 AA H-R, ZBAT-002 (Flexo RFID/ Code).

Special power supply kit containing 2 pieces of industrial nickel-metal hydride (NiMH) or lithium cells, half the size of a standard AA battery (1/2 AA size).

Original batteries ensure 100% system functionality and provide a long lifespan.

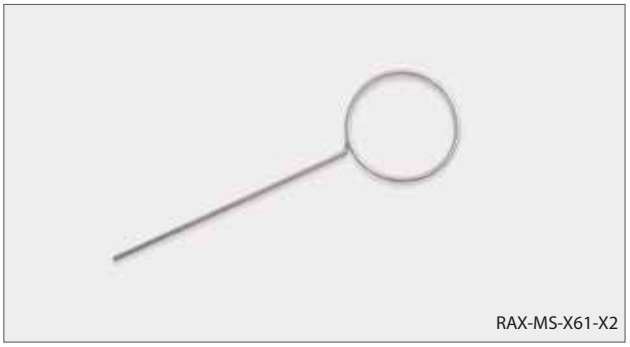
RAX-MS-X61-X2

RAX-MS-A61-X2

Pin for opening the FLEXO battery compartment (Flexo RFID/ Code).

The pin is used to release the control panel of the BURG Flexo series electronic furniture locks for subsequent battery replacement.

Tritón Pardubice, spol. s r. o.
č.p. 130, 530 02 Starý Mateřov, Czech Republic
Tel.: +420 467 401 111
E-mail: sale@triton.cz

Branch office in Prague
Do Čertous 2627/9, 193 00 Praha 20 - Horní Počernice, Czech Republic
Tel.: +420 242 441 160
E-Mail: praha@triton.cz